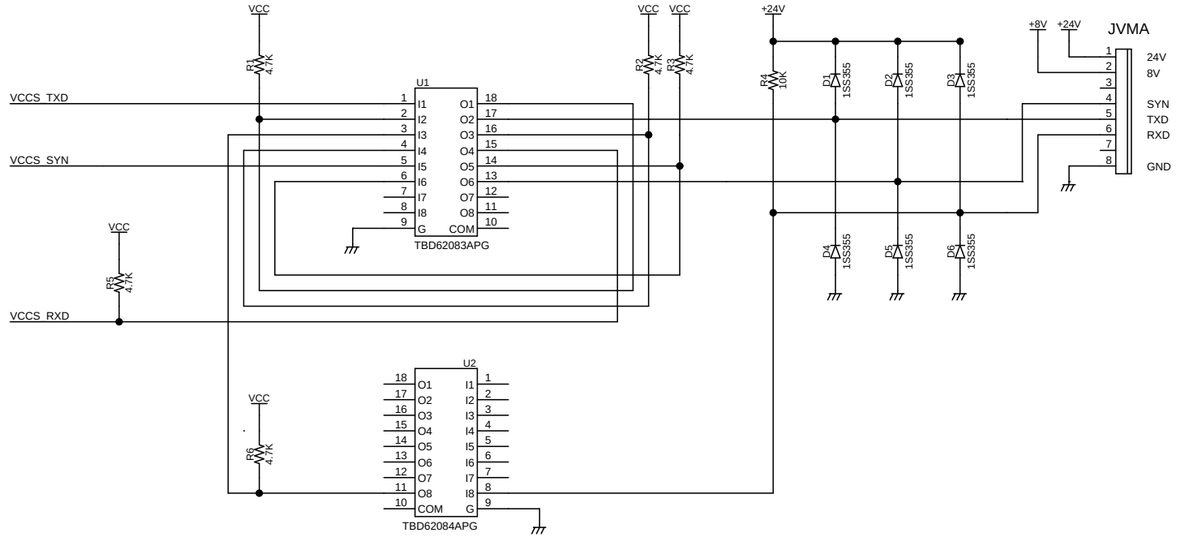

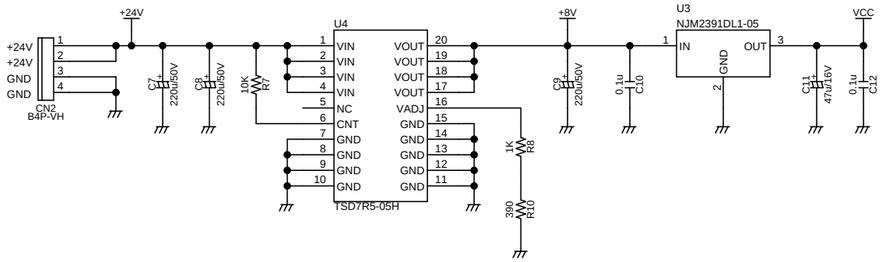

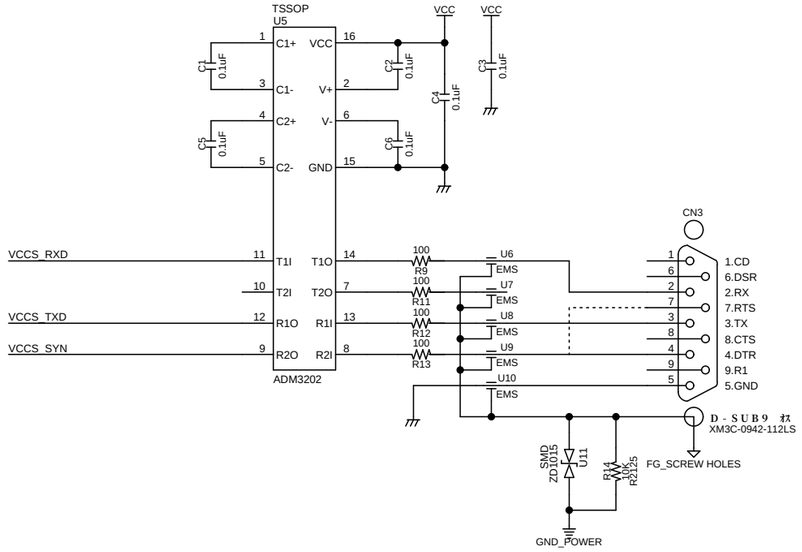

TITLE		DRAWING_No.
RS232C-JVMA CM/BV		JVMA1998-JIMBO
SHEET	DATE	DESIGN
/	1998/08/18	ASAO JVMA